Docking Station Wall Mounts

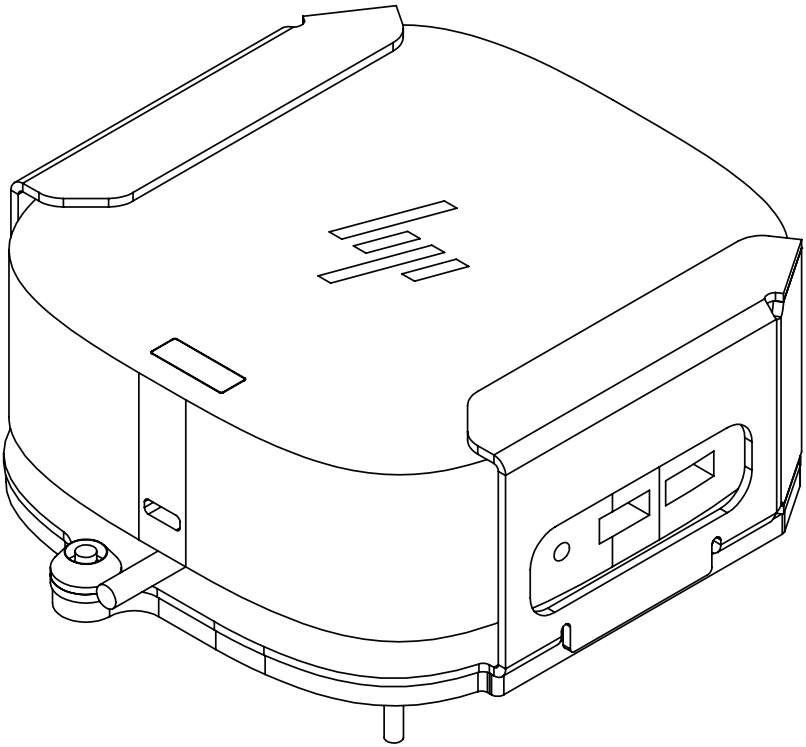

Installation Instructions

Kit P/N: 104-6962 104-8951 104-9105 104-9106
104-9107 104-9108 104-9109

Kit Contents

Kit Contents:

(1) Preassembled Wall Bracket
(1) Lock & Key

Wall Mount Hardware Package:

(4) Flat Head Screws
(4) Drywall Anchors

Wall Mount Instructions

Step 1 Determine Location: Select appropriate location on wall. Consider cable routing and length

Step 2 Mark Hole Positions: Hold Wall Bracket in position and mark 4 hole positions with pencil.

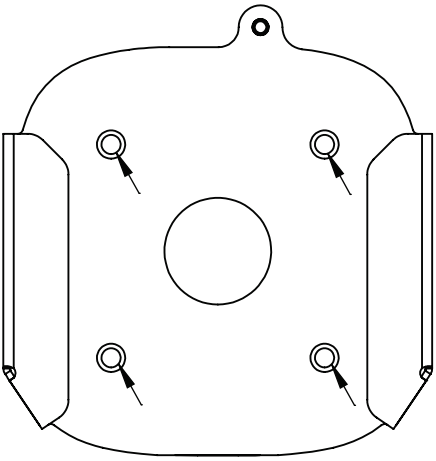

Step 3 Install Drywall Anchor: Install one Drywall Anchor at each hole mark. Using a #2 Phillips head screwdriver press the anchor into the drywall while turning clockwise until it is seated flush with the wall.

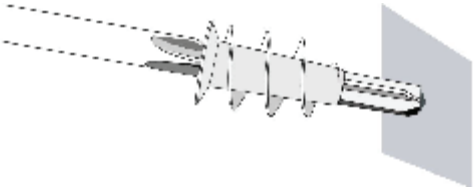

Step 4 Install Wall Bracket: Install Wall Bracket to the wall using the 4 Flat Head Screws as shown below.

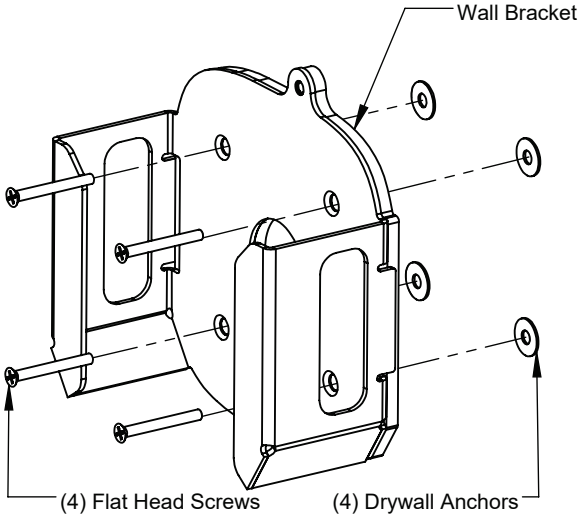

Step 5 Install Dock: Slide the docking station into the Wall Bracket. Consider cable management when placing your docking station.

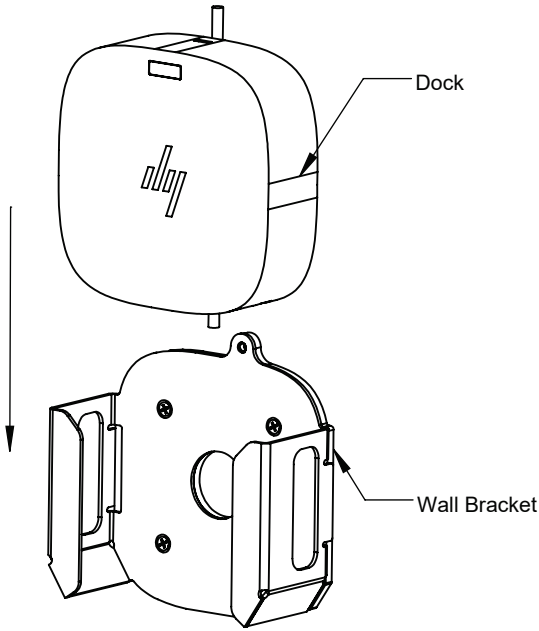

Wall Mount Instructions

Step 6 Lock Wall Mount: Install Lock by screwing into the Secure Mount as shown below. Align the protrusion on the Lock with the slot in the Wall Bracket then tighten completly with the key.

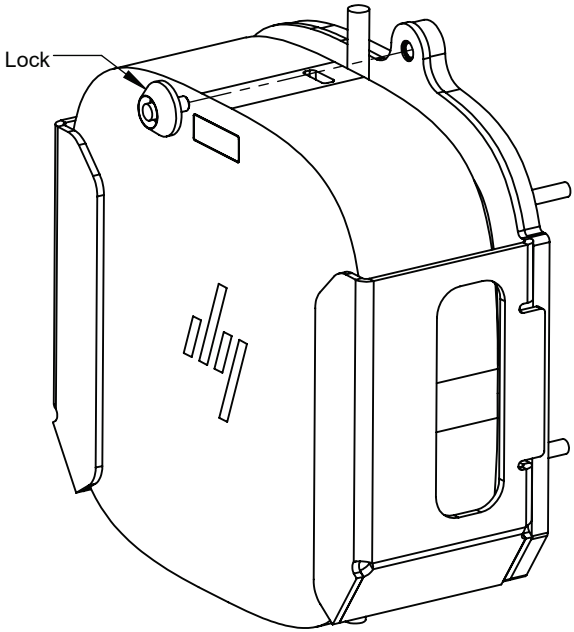

Warranty Statement
Innovation First, Inc. warrants our products against defects in material and workmanship for a period of one (1) year from the date of purchase. Innovation First, Inc. liability shall be limited to repairing or replacing, at our option, any defective product.

6962 8951 9105 9106 9107 9108 9109